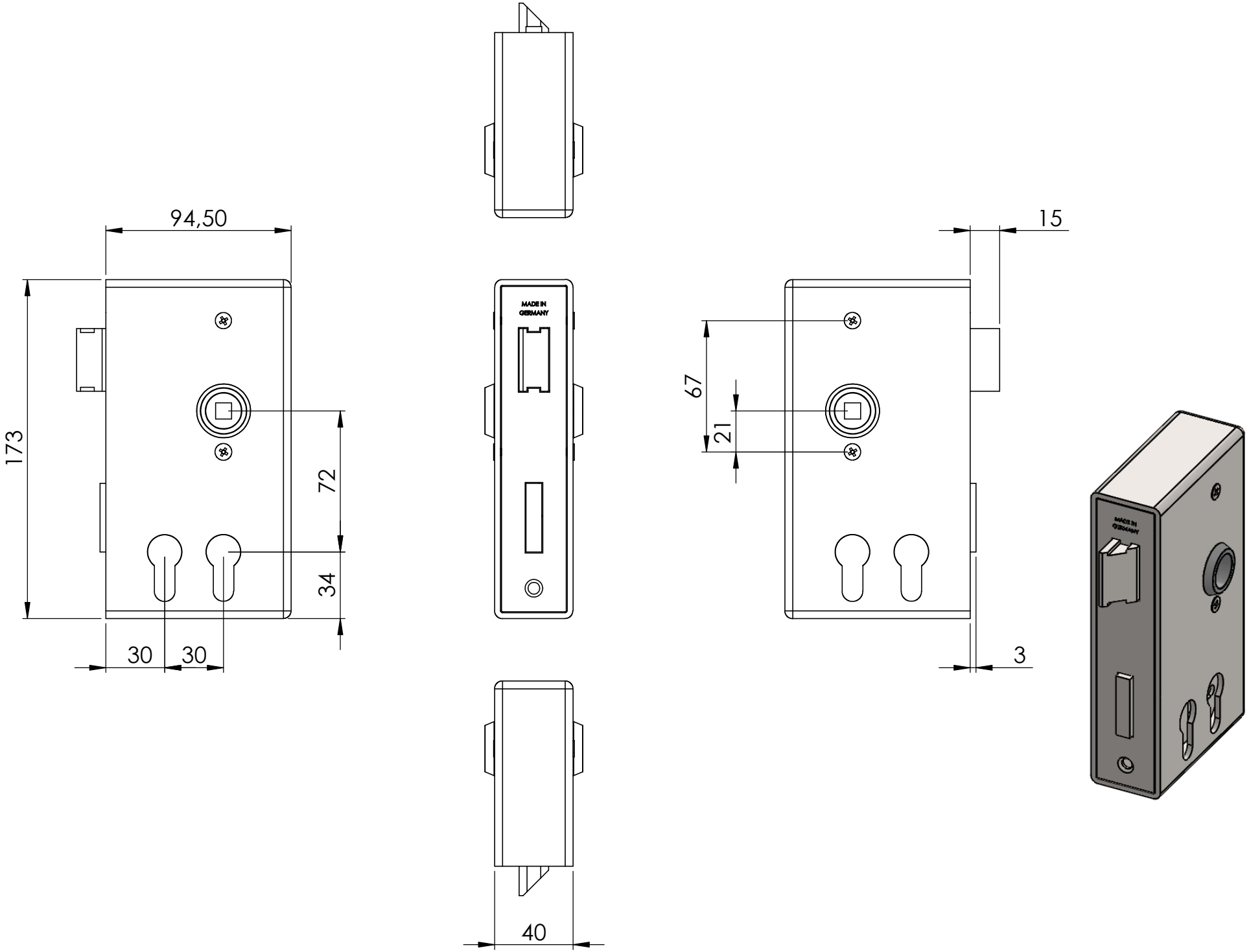
94,50
173
72
34
30
30
MADE IN
GERMANY
40
15
67
21
3
MADE IN
GERMANY

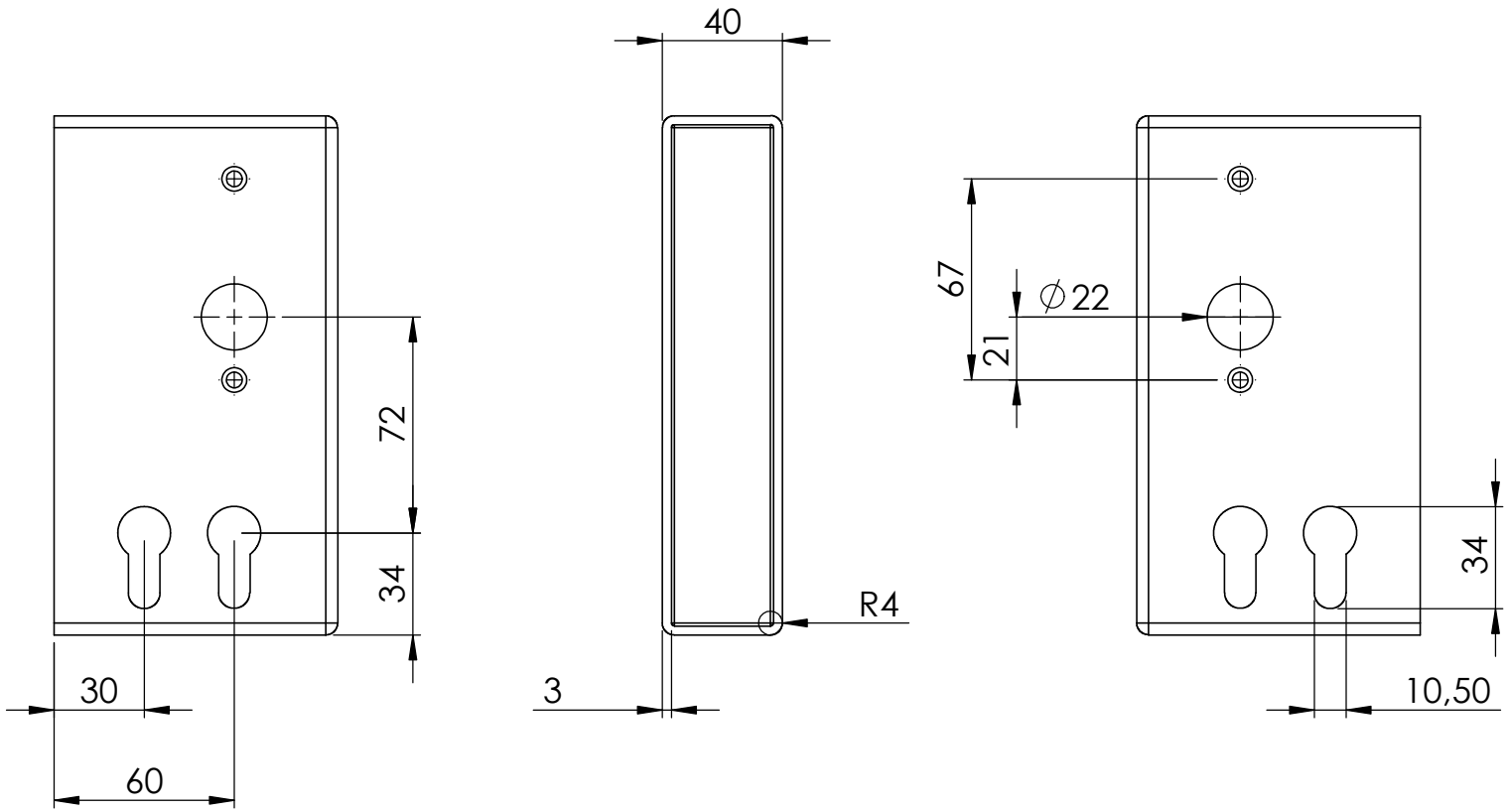
40
72
34
30
60
3
R4
67
21
∅22
34
10,50

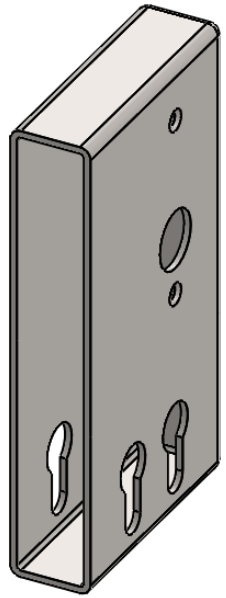

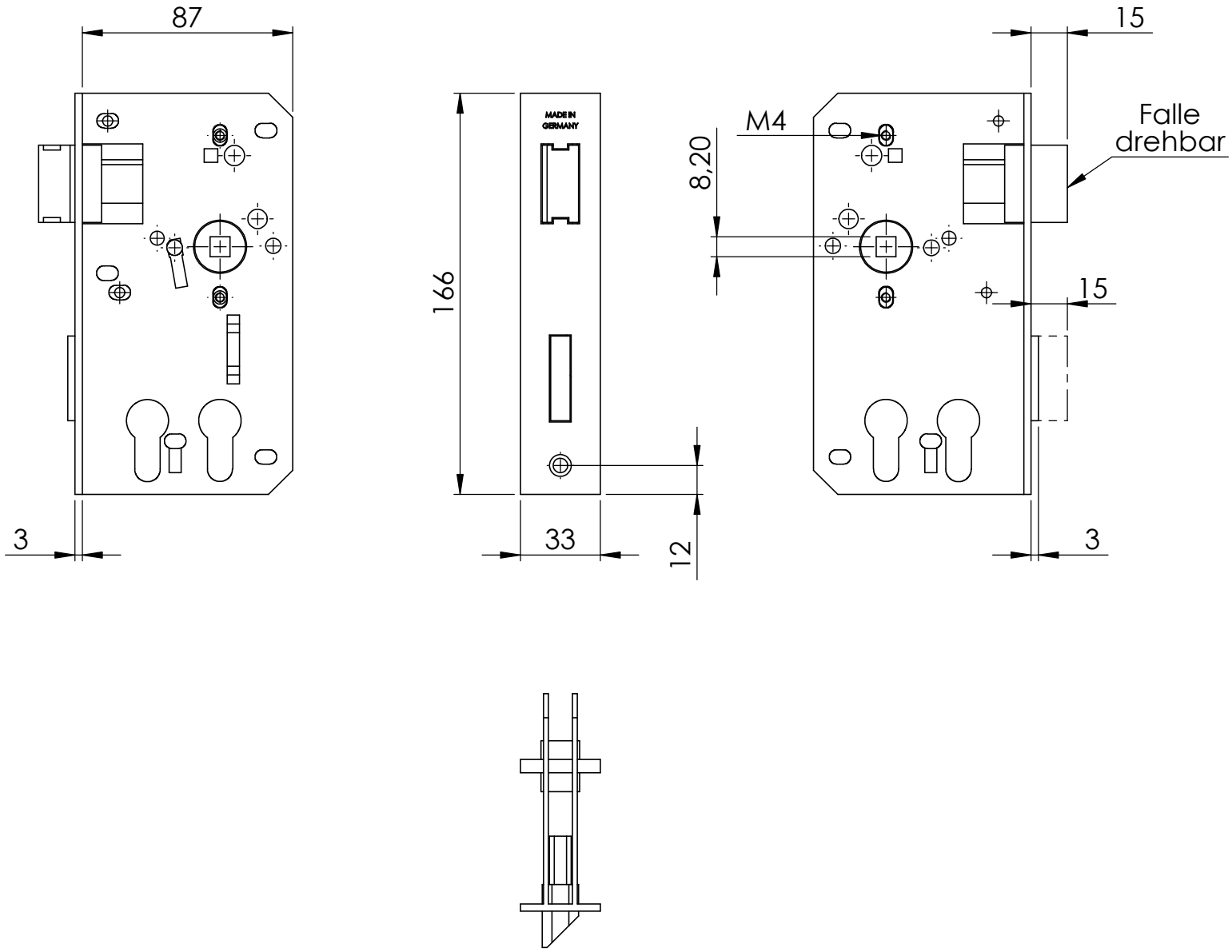
87
15
MADE IN GERMANY
M4
Falle drehbar
8,20
166
15
3
33
12
3

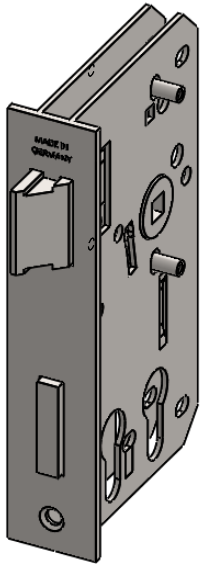
MADE IN GERMANY

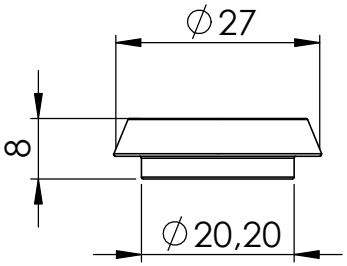
∅27
8
∅20,20
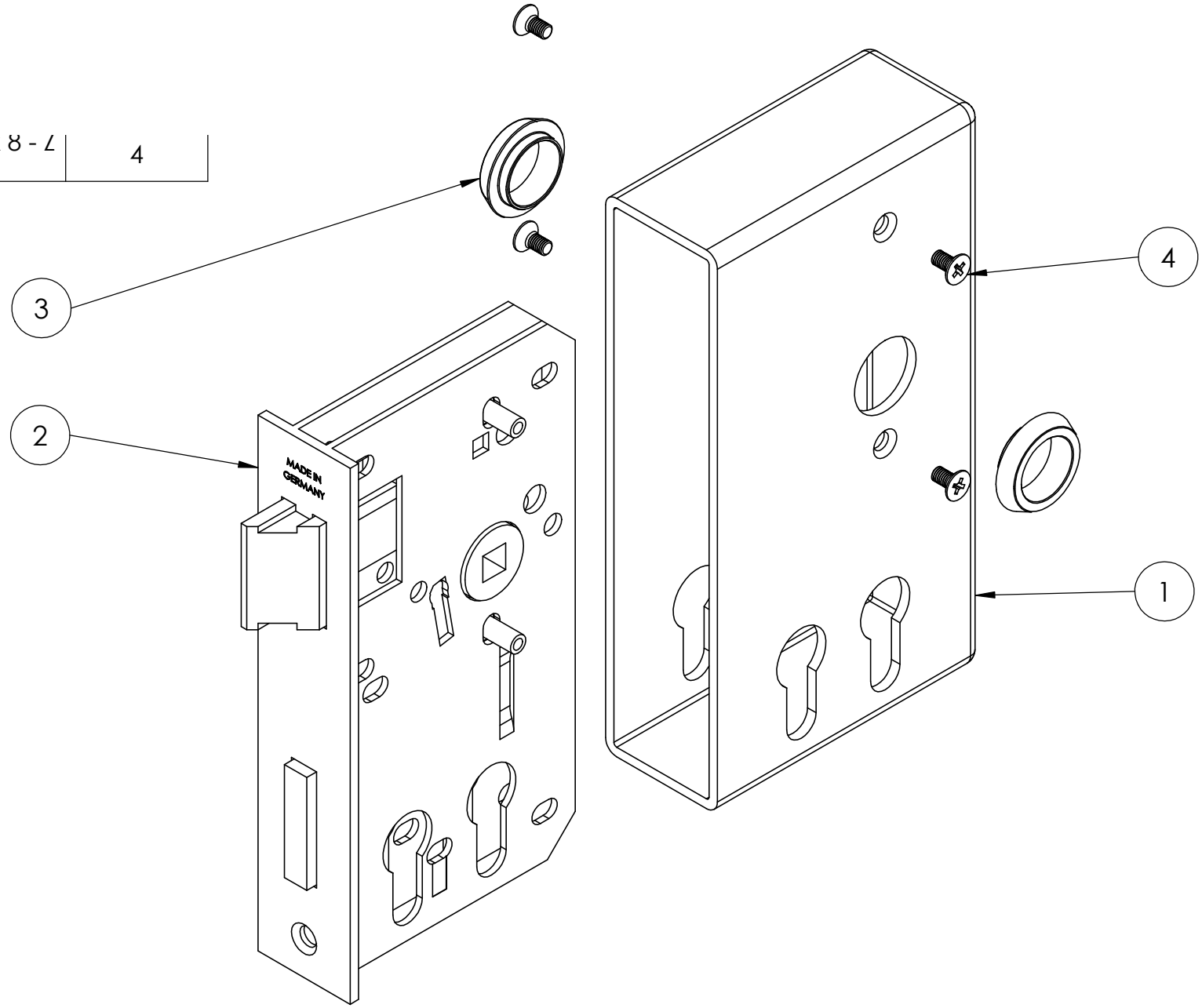
4	ISO 7046-1 - M4 x 8 - Z --- 8S	4